APPLY
INSTRUCTIONS

HX/GLRB系列软管泵
使用说明书

HOSE PUMP

传承工匠精神
造行业品牌

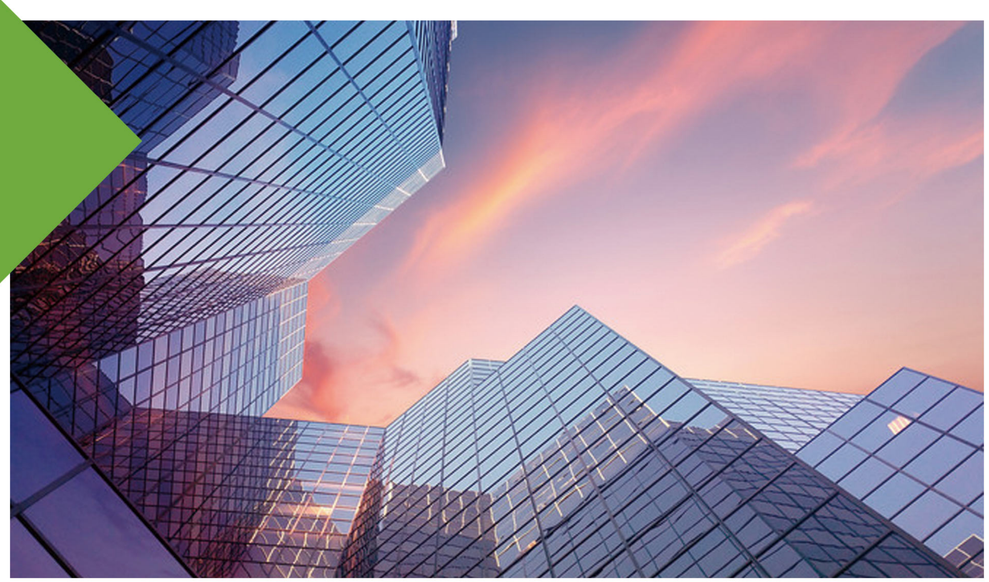

公司简介

Company Profile

我公司是一家集研发，生产加工，销售，和服务为一体的容积泵专业厂商，公司主要产品有：软管泵、凸轮转子泵、橡胶转子泵、挠性泵、齿轮泵、单螺杆泵等。我公司拥有先进的生产卧式加工中心、立式加工中心、车铣一体等各种设备，三坐标、光谱CNC齿轮检测等精密检测设备。

公司始终秉承“客户至上”的经营理念，以“为每一个客户做好每一台泵”作为我公司的生产目标，我们承诺：对于产品的每个细节做到一丝不苟，精益求精！我们坚信“品质源于认真，成功源于诚信”！与您合作之产品，共创更加美好的明天！

Our company is a professional manufacturer of displacement pumps that integrates research and development, production and processing, sales, and services. Our main products include: hose pumps, cam rotor pumps, rubber rotor pumps, flexible pumps, gear pumps, single screw pumps, etc. Our company has advanced production equipment such as horizontal machining centers, vertical machining centers, integrated turning and milling, as well as precision testing equipment such as three-dimensional and spectral CNC gear testing.

The company always adheres to the business philosophy of "customer first", with the production goal of "doing every pump well for every customer". We promise to be meticulous and strive for excellence in every detail of our products! We firmly believe that "quality comes from seriousness, and success comes from integrity"! The products we collaborate with you to create a better tomorrow together!

软管泵选型表 / Selection table for hose pump

单位名称				单位地址				邮编	
联系人		职务		联系电话		传真		手机	
贵公司所需设备型号：									
设备要求级别	□卫生型 □化工级 □无菌级								
输送介质描述：									
介质特征	□卫生型 □腐蚀型 □有毒型								
介质粘度	CP			最高粘度	CP				
正常工作温度	℃			最高允许温度	℃				
出口额定压力	MPa			出口最大压力	MPa				
入口额定压力	MPa			入口最大压力	MPa				
额定压差	MPa			真空度	MPa				
流量	m^3/h			输送距离（扬程）	m				
密封要求	□机械密封 □填料密封 □骨架密封								
传统方式	□无极变速 □定比减速 □变频变速								
是否保温	□是 □否			是否防爆	□是 □否				
防爆等级		电压		频率					
物料流向	进口方向：			进口方向：					
进出口管径	出口内径： mm			出口内径： mm					
连接方式	□法兰式 □螺纹式 □卡箍式								
转子形式	□单叶型 □蝴蝶型 □三叶型								
安装方式	□固定式 □移动式								
工作方式	□连续式 □间接式								
橡胶材料	□PVMQ硅橡胶 □EPDW三元乙丙 □FPM氟橡胶 □PTEF聚四氟								
其它特殊要求：									

WORK PRINCIPLE

工作原理

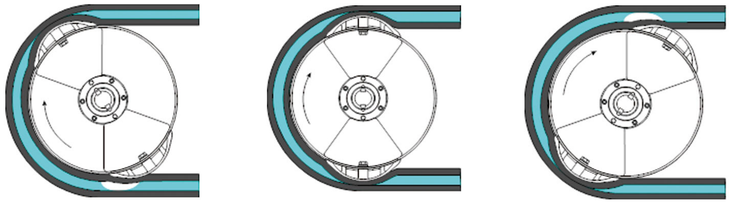

软管泵运行过程中是通过两个相对应的旋转凸块或者（滚轮）挤压弹性软管来实现。通过此旋转动作，将流体在软管内推行软管的挤压和复原形成强有力的真空将更多的流体吸入，流量与转数成正比，可以通过变速，调节达到节能效果。

During the operation of the hose pump, it is achieved by squeezing the elastic hose with two corresponding rotating protrusions or rollers. Through this rotation action, the fluid is pushed through the hose to compress and restore, forming a strong vacuum that sucks in more fluid. The flow rate is proportional to the number of revolutions, and can be adjusted through variable speeds to achieve energy-saving effects.

产品优势

软管泵的设计使得它又具备其他更加独特的功能。这样的结果使得它在很多对泵系统有着非常过分要求的场合广泛使用。例如:

- 磨损性的和高黏度的介质：软管对介质磨损性没有限制，不存在密封，也没有其他部件和介质接触；
- 不可切断的介质：非常温和的泵送不会对介质产生任何损坏；
- 高黏度的介质：产生出几乎全真空来吸入介质；
- 结晶介质：没有阀门或拐角导致结晶体的产生而将通道堵塞；

The design of the hose pump allows it to have other more unique functions. This result makes it widely used in many situations where there are very excessive requirements for pump systems. For example:

· Abrasive and high viscosity media: The hose has no restriction on the wear resistance of the media, there is no sealing, and there are no other components in contact with the media;

· Non cutting media: very gentle pumping will not cause any damage to the media;

· High viscosity medium: generates almost full vacuum to absorb the medium;

· Crystallization medium: The absence of valves or corners leads to the formation of crystals and blocks the channels;

- 计量使用：介质不能回流使得泵送介质的量非常稳定；
- 维修费用高的场合：软管是唯一磨损的部件，维修时间极短；
- 自吸使用的场合：泵可以干转，润滑在软管的外部完成；
- 含固体物质多的介质：最高可输送含80%固体物质的介质，如采矿等；
- 吸入口有堵塞的场合：泵可以干转，而且可以倒转排出堵塞物；
- 防爆的场合：泵内部没有金属和金属之间的接触；

· Measurement use: The medium cannot reflux, making the amount of pumped medium very stable;

· In situations where maintenance costs are high: the hose is the only component that is worn out, and the repair time is extremely short;

· Occasions for self priming use: The pump can run dry and lubrication is completed outside the hose;

· Media with a high content of solid substances: media that can transport up to 80% of solid substances, such as mining;

· Occasions where the suction port is blocked: the pump can run dry and reverse to discharge the blocked material;

· Explosion proof occasions: there is no contact between metal and metal inside the pump;

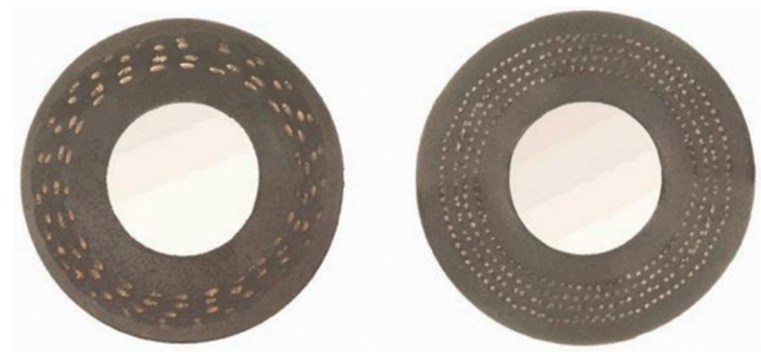

软管的优点

我们采用高品质自主要发复合橡胶
适用出口压力高达16bar
具有各种橡胶软管10个型号
可匹配各种国产和进口软管

WE USE HIGH-QUALITY SELF-DEVELOPED COMPOSITE RUBBER
APPLICABLE OUTLET PRESSURE UP TO 16BAR
10 MODELS OF VARIOUS RUBBER HOSES AVAILABLE
CAN BE MATCHED WITH VARIOUS DOMESTIC AND IMPORTED HOSES

优化运营成本

只有一个软管易损件
现场维修停机时间短，只需要几分钟既可跟换完成。
低运行，低耗电量

OPTIMIZE OPERATIONAL COSTS
ONLY ONE HOSE VULNERABLE PART
THE ON-SITE MAINTENANCE DOWNTIME IS SHORT, AND IT ONLY TAKES A FEW MINUTES TO COMPLETE THE REPLACEMENT.
LOW OPERATION, LOW POWER CONSUMPTION

软管泵参数表

/ PARAMETER TABLE OF HOSE PUMP

型号 model	最大 maximum flow	建议流量 Suggested traffic	压力 pressure	口径 caliber
HXRB－10	180L/h	18-90L/h	0.8MPa	宝塔 16
HXRB－15	600L/h	30-315L/h	0.8MPa	宝塔 20
HXRB－20	1020L/h	102-535L/h	0.8MPa	宝塔 25
HXRB－25	2.2m³/h	0.3-1m³/h	1.6MPa	DN25 法兰
HXRB－32	5.3m³/h	0.8-2.3m³/h	1.6MPa	DN32 法兰
HXRB－40	9.6m³/h	2-5m³/h	1.6MPa	DN40 法兰
HXRB－50	15.8m³/h	3.5-10.3m³/h	1.6MPa	DN50 法兰
HXRB－65	22m³/h	8.3-16.7m³/h	1.6MPa	DN65 法兰
HXRB－80	35m³/h	13.3-18.9m³/h	1.6MPa	DN80 法兰
HXRB－100	54m³/h	21.6-37.2m³/h	1.6MPa	DN100 法兰

性能曲线图 / Performance curve

根据性能曲线图选择适合的流量压力和电机功率；

①选择所需要的流量，这样可以确定泵的转数

②向上移动计算所需要的压力

③向左移动查看电机和功率

④确定输送流体的温度

⑤向左移动计算排放压力

⑥向下移动确定您的流体温度下推荐的最大转数，电机功率KW

Select the appropriate flow pressure and motor power based on the performance curve;

① Select the required flow rate to determine the pump speed

② The pressure required to move the calculation upwards

③ Move left to view motor and power

④ Determine the temperature of the conveying fluid

⑤ Move left to calculate discharge pressure

⑥ Move down to determine the recommended maximum number of revolutions at your fluid temperature, motor power KW

技术参数

微型泵 / MICROPUMP

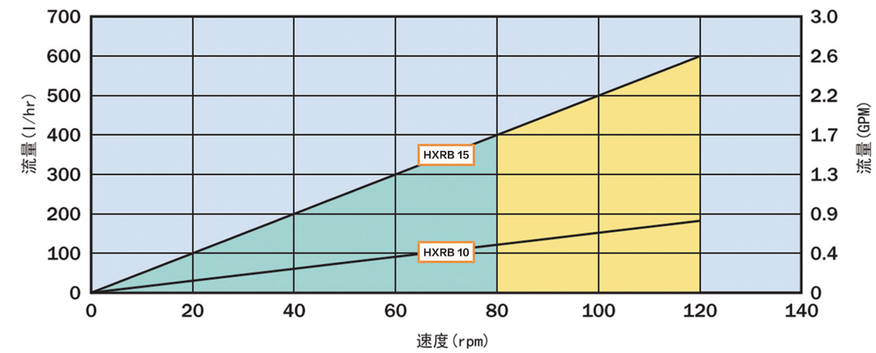

小型泵 / SMALL PUMP

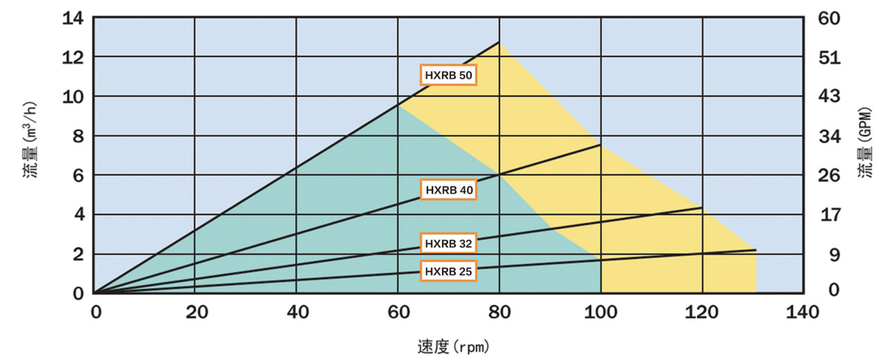

中型泵和大型泵 / MEDIUM AND LARGE PUMPS

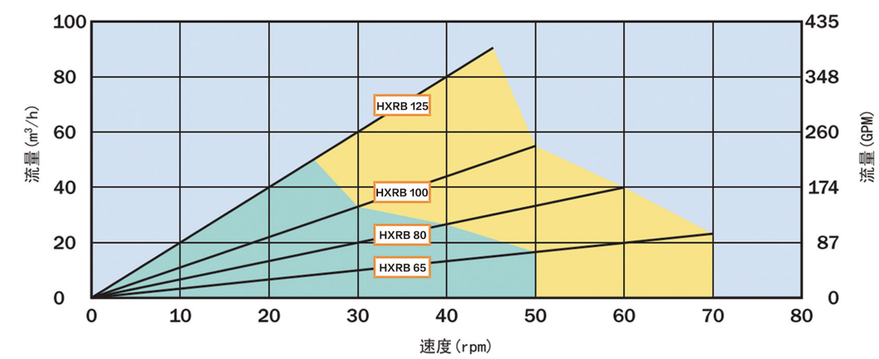

持续运行 CONTINUOUS OPERATION

间歇运行 INDIRECT OPERATION 最多运行1小时 至少停止1小时

安装尺寸图 / Drawing

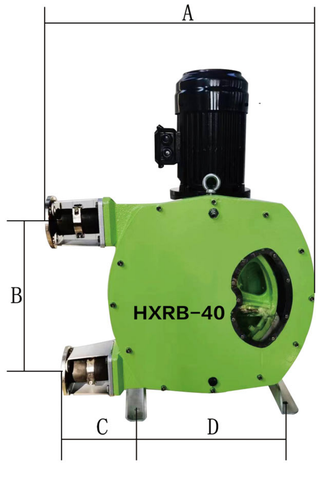

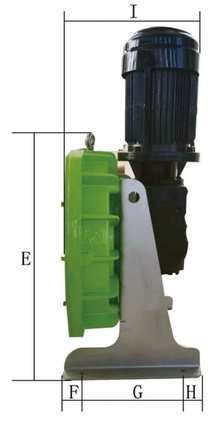

	A	B	C	d	E	F	G	H	I
HXRB-25	520	264	140	345	480	70	225	70	290
HXRB-32	590	330	175	365	540	70	230	70	320
HXRB-40	705	430	205	445	700	50	275	50	400

高质量橡胶软管

高质量的橡胶软管源于我们优秀的橡胶研发工厂

软管在泵中起到了至关重要的作用，因此我们的橡胶研发部门为HXRB-GLRB研制了独特的软管配方。

我公司生产的软管泵有天然橡胶NR三元乙丙橡胶EPDM和适应食品级的软管氢HNBR化丁青和耐油类的丁青橡胶软管NBR软管由优质的橡胶性弹性体制成，配有编织筋，增强强度，通过精密加工减少误差，使其壁厚均匀，最大限度地延长软管的使用寿命。

NR软管适合输送研磨性强的介质，如污泥、石灰、等，温度范围一般在－20℃到80℃

EPDM软管适用于腐蚀性化学液体，如酸或者部分溶剂，温度范围一般在－14℃到90℃

HNBR软管适合输送食品领域，如啤酒花、大块水果酱、辣椒酱、或者输送有机废料。温度范围0℃到120℃

NBR软管适合输送含油类物料，如油泥、餐厨垃圾处理、动物内脏、温度范围0℃到80℃

HIGH QUALITY RUBBER HOSE

HIGH QUALITY RUBBER HOSES COME FROM OUR EXCELLENT RUBBER RESEARCH AND DEVELOPMENT FACTORY

HOSES PLAY A CRUCIAL ROLE IN PUMPS, SO OUR RUBBER RESEARCH AND DEVELOPMENT DEPARTMENT HAS DEVELOPED A UNIQUE HOSE FORMULA FOR HXRB-GLRB.

THE HOSE PUMPS PRODUCED BY OUR COMPANY INCLUDE NATURAL RUBBER NR EPDM AND FOOD GRADE HOSES SUITABLE FOR HYDROGEN HNBR AND OIL RESISTANT NITRILE RUBBER HOSES. NBR HOSES ARE MADE OF HIGH-QUALITY RUBBER ELASTOMERS, EQUIPPED WITH WOVEN RIBS TO ENHANCE STRENGTH, REDUCE ERRORS THROUGH PRECISION PROCESSING, ENSURE UNIFORM WALL THICKNESS, AND MAXIMIZE THE SERVICE LIFE OF THE HOSES.

NR HOSES ARE SUITABLE FOR CONVEYING HIGHLY ABRASIVE MEDIA SUCH AS SLUDGE, LIME, ETC., WITH A TEMPERATURE RANGE OF -20 ℃ TO 80 ℃

EPDM HOSES ARE SUITABLE FOR CORROSIVE CHEMICAL LIQUIDS, SUCH AS ACIDS OR SOME SOLVENTS, WITH A TEMPERATURE RANGE OF -14 ℃ TO 90 ℃

HNBR HOSES ARE SUITABLE FOR CONVEYING FOOD PRODUCTS SUCH AS HOPS, LARGE FRUIT JAMS, CHILI SAUCE, OR ORGANIC WASTE. TEMPERATURE RANGE 0 ℃ TO 120 ℃

NBR HOSE IS SUITABLE FOR CONVEYING OILY MATERIALS, SUCH AS SLUDGE, KITCHEN WASTE TREATMENT, ANIMAL OFFAL, AND TEMPERATURE RANGE FROM 0 ℃ TO 80 ℃

双泵头 / Double pump head 高流量可达100 m³/h

GLRB-HXRB系类软管泵都具有双泵头配置，两个泵头和一个驱动电机，可使流量加倍，具有体积小，脉动小维护成本底等优点。

The GLRB-HXRB series hose pumps all have a dual pump head configuration, with two pump heads and one drive motor, which can double the flow rate, and have the advantages of small volume, small pulsation, and low maintenance cost.

GLRB我公司滚轮式软管泵属于低压软管泵最大压力8bar建议使用压力在0.5bar，软管的挤压所以产生的热量比较滑靴式要底这样就不用加入润滑油对输送的物料不会有污染，缺点是压力低压力大后所得到的流量会降低，建议使用转数在40rpm，流量参数参考性能曲线图，安装尺寸和滑靴式相同。

GLRB's roller type hose pump belongs to the low-pressure hose pump. It is recommended to use a maximum pressure of 0.8 bar. The compression of the hose generates more heat than the sliding shoe type, so there is no need to add lubricating oil to pollute the transported material. The disadvantage is that the flow rate obtained after low pressure and high pressure will decrease. It is recommended to use a speed of 40 rpm, and the flow parameters refer to the performance curve. The installation size is the same as the sliding shoe type.

GLRB－32	5.3m³/h	0.8-2.3m³/h	0.8bar	32 法兰
GLRB－40	9.6m³/h	2-5m³/h	0.8bar	40 法兰
GLRB－50	15.8m³/h	3.5-10.3m³/h	0.8bar	50 法兰
GLRB－65	22m³/h	8.3-16.7m³/h	0.8bar	65 法兰
GLRB－80	35m³/h	13.3-18.9m³/h	0.8bar	80 法兰
GLRB－100	54m³/h	21.6-37.2m³/h	0.8bar	100 法兰

软管泵附件配置 / Configuration of hose pump accessories

泄露探测仪

LEAKAGE DETECTOR

变频器

FREQUENCY CONVERTER

脉动阻尼器

PULSATION DAMPER

安装方式 / Installation method

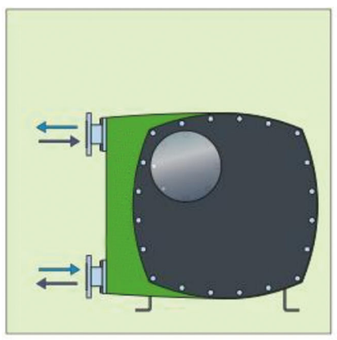

位置1

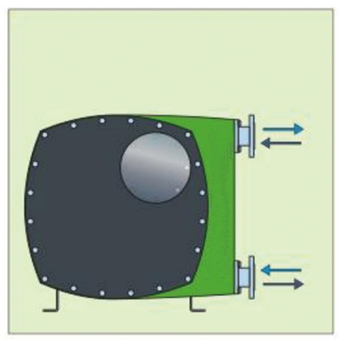

位置2

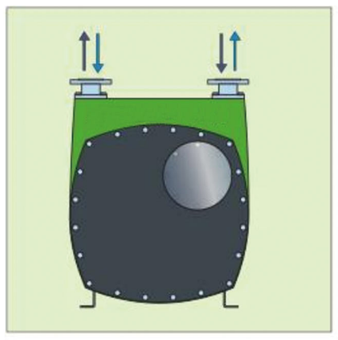

位置3

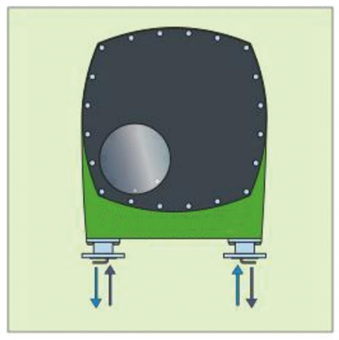

位置4

软管泵应用场景 / Application Scenario

陶瓷行业

CERAMICS

锂电池行业

LITHIUM BATTERY INDUSTRY

絮凝剂加药领域

FLOCCULANT DOSING FIELD

水处理行业

WATER TREATMENT INDUSTRY

餐厨垃圾处理行业

KITCHEN WASTE TREATMENT INDUSTRY

锂电池行业

LITHIUM BATTERY INDUSTRY